INSTRUCTION MANUAL FOR INDIVIDUALLY PACKAGED DOUBLE ENCASED THERMOSTATS TS9530-TS9540

TS9530: Double encased adjustable immersion thermostat, control by dials, individually packaged in a box. Suitable for applications where a direct installation on a sheath or a perforated sheath (for air ducts), or wherever a double temperature control is needed.

TS9540: Double encased adjustable immersion thermostat, control by a dial and screwdriver, individually packaged in a box. Suitable for applications where a direct installation on a sheath or a perforated sheath (for air ducts), or wherever a double temperature control is needed.

TECHNICAL AND ELECTRICAL FEATURES

Nominal contact load:	type TS9530	C-1 16 (3)A / 250V~ (switch-off contact)
		C-2 6 (1)A / 250V~ (switch-on contact)
	type TS9540	C-1 16 (3)A / 250V~ (switch-off contact)
		C-2 6 (1)A / 250V~ (switch-on contact)

Working temperature: 0 ÷ 60 °C / 30 ÷ 120 °C
Temperature difference: 2 ÷ 5K
Temperature range: IP 40
Max. working temperature: T90
Installation position: any
Cover: plastic

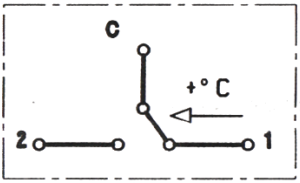

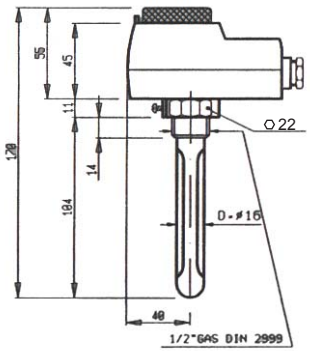

Model TS9530

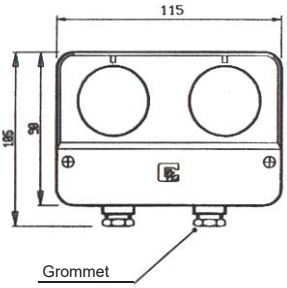

Model TS9540

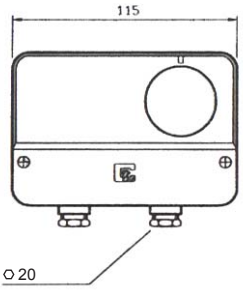

Manufacturer: CAMPINI COREL

Termoregolatori Campini Corel S.p.A.
22066 Mariano Comense - Como - Italy
Via Don Guanella, 1

Distributor: Regulus

Regulus spol. s r.o.
Do koutů 1897/3, 143 00 Praha 4
Tel.: 241 764 506 Fax: 241 763 976
e-mail: obchod@regulus.cz, www.regulus.cz

CE